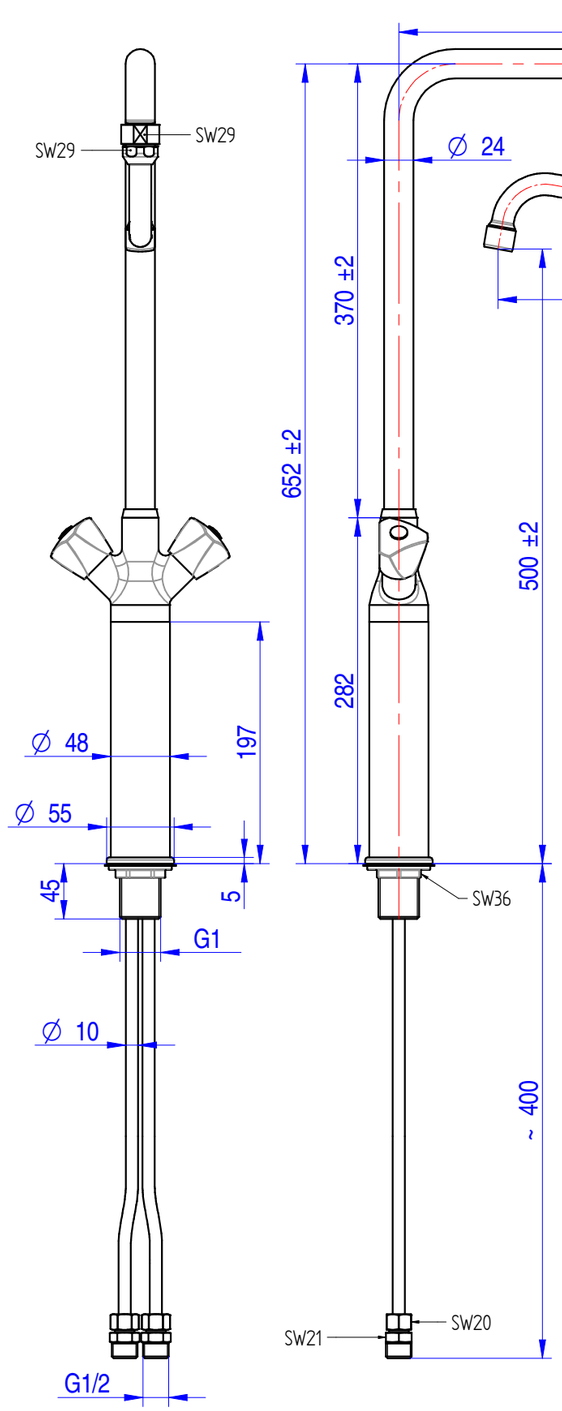

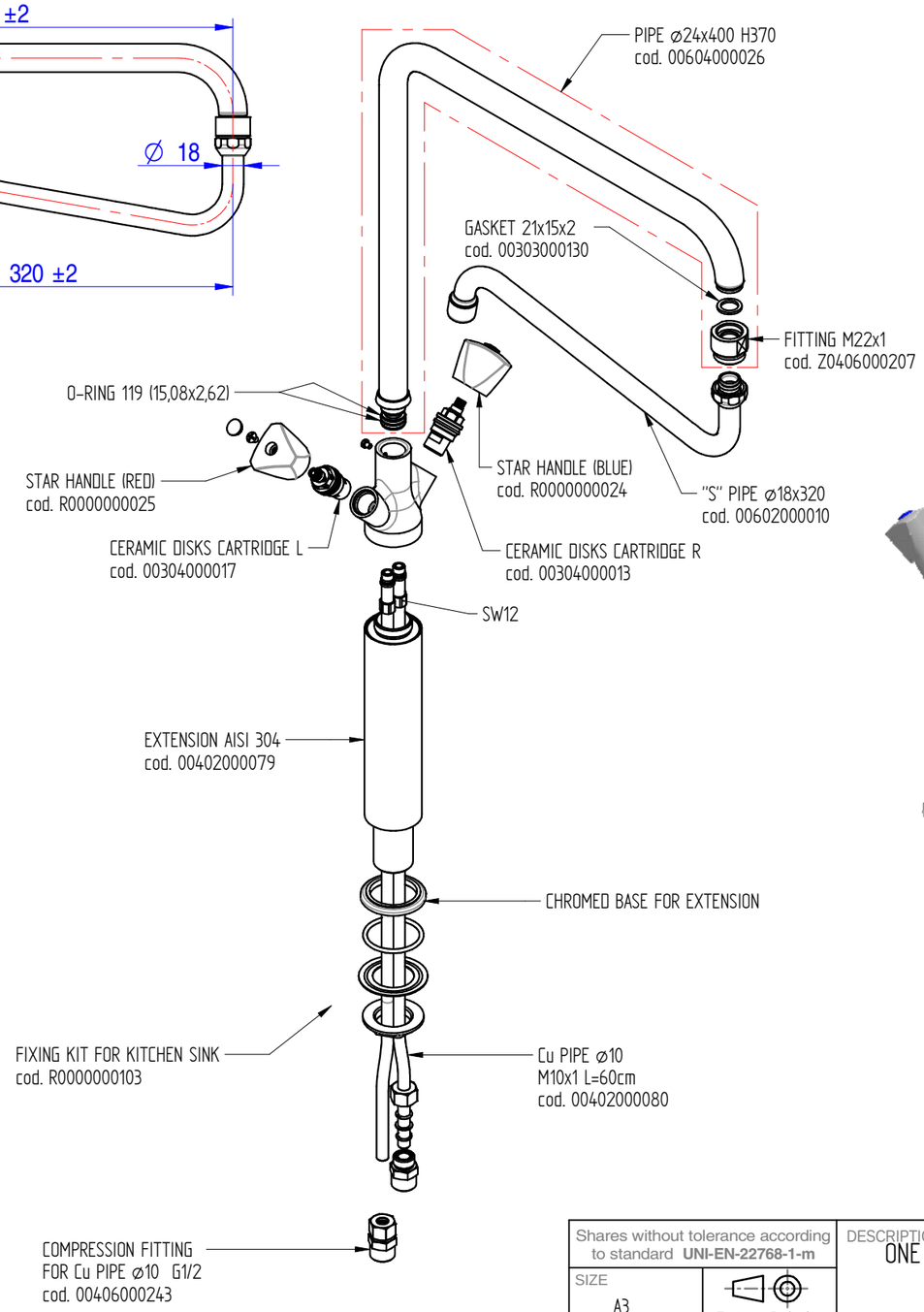

FLOW RATE : 18 L/min at 3,5 BAR

sink fixing hole : ø34 mm

Shares without tolerance according to standard **UNI-EN-22768-1-m**	DESCRIPTION ONE HOLE SINK TAP WITH EXTENSION, STAR HANDLE AND DOUBLE-JOINT SWING NOZZLE, "D" PIPE ø24x400 + "S" PIPE ø18x320	CODE OLIMP0002
SIZE A3 — European Projection		WEIGHT 2,83 Kg
DATE 20/09/2023 — SCALE 1:5	MONOLITH DESIGN AND TECHNOLOGICAL RESEARCH FOR WATER	
DRAWN PICCOLO M.		
VALIDATE PICCOLO M.	VIA DELL'ARTIGIANO 8/F-8-G , 31050 MONASTIER di TREVISO (TV) tel: 0422 842157 - fax: 0422 708978	

DONE WITH DESIGN CAD - PROHIBITED THE CHANGES MANUAL

Rev. 00