rev.	CHANGE DESCRIPTION	DATE	DRAWN	VALIDATE
00	.	.	PICCOLO M.	PICCOLO M.

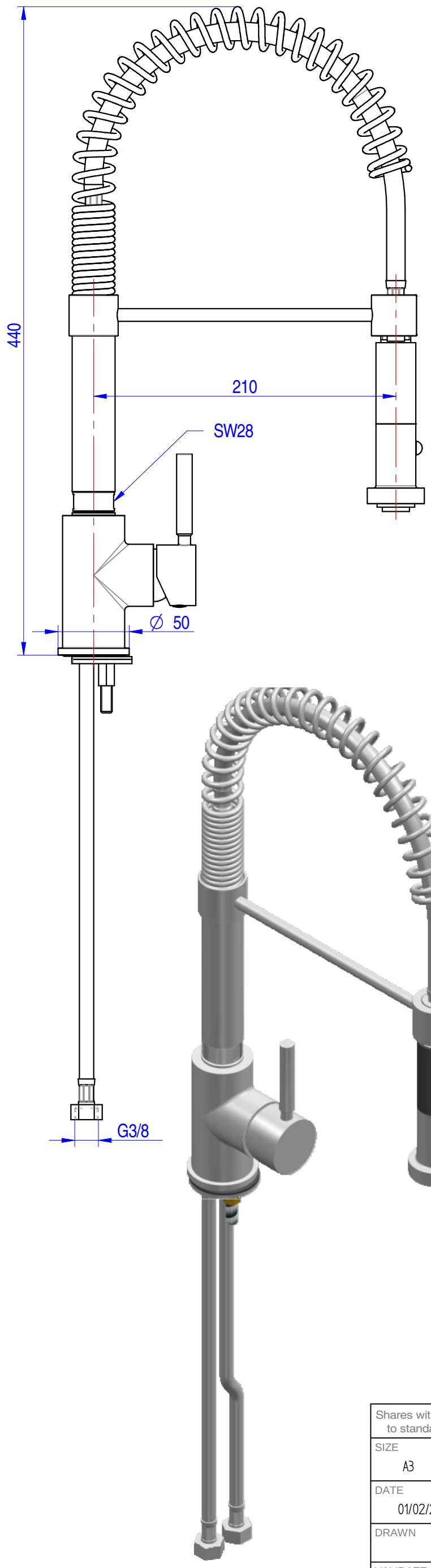

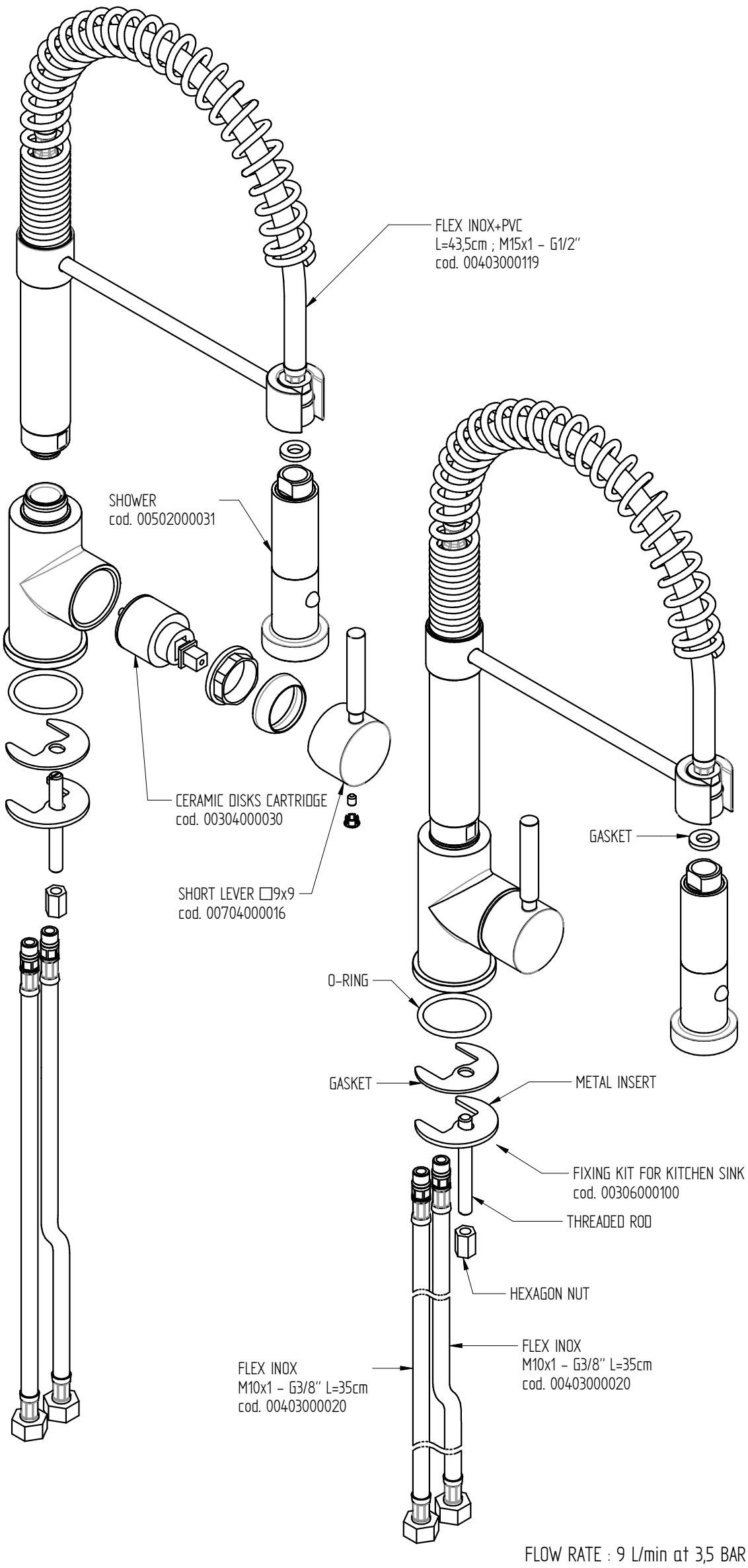

FLOW RATE : 9 L/min at 3,5 BAR

sink fixing hole : ø30 mm

Shares without tolerance according to standard **UNI-EN-22768-1-m**	DESCRIPTION		CODE
SIZE A3	European Projection	ONE HOLE MIXER TAP, HEIGHT 440mm, COMPLETE WITH DUAL JET SHOWER	EROS001
DATE 01/02/2019	SCALE 1:3		WEIGHT 3,14 Kg
DRAWN PICCOLO M.			
VALIDATE PICCOLO M.			

MONOLITH
DESIGN AND TECHNOLOGICAL RESEARCH FOR WATER

VIA DELL'ARTIGIANO 8/F-8-G , 31050 MONASTIER di TREVISO (TV) tel: 0422 842157 - fax: 0422 708978

DONE WITH DESIGN CAD - PROHIBITED THE CHANGES MANUAL