BRATT PAN

METOS PRINCE 60, 85

Accessories
Water tap 3755416
Hight adjustment 3755414
Stainless Steel bottom 3755411

Installation and Operation Manual

Rev.1.2

~~MG codes~~
3755400, 3755401, 3755402, 3755403, 3755400N, 3755401N, 3755401N, ,3755402N, 3755403N, 3755401MO, 3754415M, 3754416M, 3754416M, 3754417M, 3754418M, 3754425M, 3754426M, 3754426M, 3754426MO, 3754426MO, 3754427M, 3754428M, 3754428MO, 3755403MO

TABLE OF CONTENTS

1. General ... 3
1.1. Symbols used in the manual ... 3
1.2. Symbols used on the appliance ... 3
1.3. Checking the relationship of the appliance and the manual ... 3
2. Safety ... 4
2.1. Safe use of the appliance ... 4
2.2. Safety instructions in case of malfunction ... 4
2.3. Disposal of the appliance ... 4
3. Functional description ... 5
3.1. Intended use of the appliance ... 5
3.1.1. Use for other purposes ... 5
3.2. Operating principle ... 5
4. Operation instructions ... 6
4.1. Before use ... 6
4.1.1. Preparing the use ... 6
4.2. Operation ... 6
4.2.1. Switching on the bratt pan ... 6
4.2.2. Setting of the frying temperature ... 7
4.2.3. Frying temperature ... 7
4.2.4. Tilting ... 7
4.2.5. Filling the water ... 8
4.3. After use ... 8
4.3.1. Cleaning ... 8
4.3.2. Service ... 9
5. Installation ... 10
5.1. Transporting and unpacking the bratt pan ... 10
5.2. Positioning the bratt pan ... 10
5.3. Electrical connections ... 10
5.4. Water connection ... 10
5.5. Test-run ... 11
6. Troubleshooting ... 12
7. Technical specifications ... 14

1. General

Carefully read the instructions in this manual as they contain important information regarding proper, efficient and safe installation, use and maintenance of the appliance.

Keep this manual in a safe place for eventual use by other operators of the appliance.

The installation of this appliance must be carried out in accordance with the manufacturer's instructions and following local regulations. The connection of the appliance to the electric and water supply must be carried out by qualified persons only.

Persons using this appliance should be specifically trained in its operation.

Switch off the appliance in case of failure or malfunction. The periodical function checks requested in the manual must be carried out according to the instructions. Have the appliance serviced by a technically qualified person authorized by the manufacturer and using original spare parts.

Not complying with the above may put the safety of the appliance in danger.

1.1. Symbols used in the manual

This symbol informs about a situation where a safety risk might be at hand. Given instructions are mandatory in order to prevent injury.

This symbol informs about the right way to perform in order to prevent bad results, appliance damage or hazardous situations.

This symbol informs about recommendations and hints that help to get the best performance out of the appliance.

1.2. Symbols used on the appliance

This symbol on a part informs about electrical terminals behind the part. The removal of the part must be carried out by qualified persons only.

1.3. Checking the relationship of the appliance and the manual

The rating plate of the appliance indicates the serial number of the appliance. If the manuals are missing, it is possible to order new ones from the manufacturer or the local representative. When ordering new manuals it is essential to quote the serial number shown on the rating plate.

2. Safety

2.1. Safe use of the appliance

Because the bratt pan is a heated appliance that has hot surfaces during normal use, the following warnings and instructions must be followed to avoid burns:

- During long-time operation even the sides of the frying surfaces, the pouring nose and the lid get hot.
- For safe frying, always use heat protective gloves and appropriate accessories.
- Look out for discharging steam when opening the lid, especially when simmering or stewing.
- Do not leave the bratt pan on for long periods totally without supervision.

STOP It is strictly forbidden to use bratt pan as a deep fat fryer.

2.2. Safety instructions in case of malfunction

Switch off the appliance if it is damaged or malfunctioning. Contact authorised service personnel using original spare parts for service of the appliance.

2.3. Disposal of the appliance

The destroying of the appliance when the end of its economical lifetime has been reached must be carried out in accordance with local rules and regulations. Taking care of substances that might be harmful to the environment, if not properly handled, and utilizaton of reusable materials is best done by using professional personnel specializing in recycling.

3. Functional description

3.1. Intended use of the appliance

Prince bratt pan is intended for heating, frying and stewing of food.

3.1.1. Use for other purposes

Use of the appliance for other purposes than stated above is prohibited.

The manufacturer of the appliance takes no responsibility for situations that may occur if warnings and instructions in this manual are neglected.

3.2. Operating principle

The frying surface of the bratt pan is heated by specially designed heating elements that are controlled by a thermostat. The yellow pilot light goes off when the preset frying temperature is reached.
The tilting of the bratt pan is electrical and is controlled by push buttons on the control panel.
The bratt pan models with letter W in the type marking are equipped with the possibility to fill bowl of the bratt pan by cold water.
The bratt pan models with letter S in the type marking have the bottom of the bowl made from clad steel. External (frying) surface of this bottom is stainless, internal surface is made from construction steel.
The bratt pan models with letter H in the type marking are equipped with the possibility to adjust the working height of the bratt pan.

4. Operation instructions

4.1. Before use

4.1.1. Preparing the use

The frying surface of the bratt pan is protected with a thin layer of grease during storage and transportation. Before first-time use the grease must be removed by using hot water and detergent.

After the cleaning, the frying surface must be burned in with salt-free grease. Heat up the pan to 200°C keeping the lid closed. Burn the grease for 5-10 minutes, let the pan cool down and wipe off excessive grease. Repeat when necessary. Do not use oil for burning. Heated oil would create a tough surface, which is difficult to clean. A well greased pan reduces fat consumption in frying and minimizes burning of foodstuffs.

4.2. Operation

4.2.1. Switching on the bratt pan

During the installation, a mains switch may have been fitted near the bratt pan, often on a wall nearby. Check that the mains switch is in the ON position.

The bratt pan is controlled from the operating panel.

The pan is switched on by turning the thermostat knob to the desired frying temperature, whereafter
• the heating-up starts
• the green pilot light goes on
• the yellow pilot light goes on, and it goes off when the preset temperature is reached.

Operating panel
1. Green pilot light PAN SWITCHED ON
2. Yellow pilot light TEMPERATURE
3. Temperature adjustment
4. Pan bowl tilting
5. Return pan bowl to working (horizontal) position
6. Water filling (optional)
7. Increment of bratt pan height (optional)
8. Decrement of bratt pan height (optional)

Heating up to the frying temperature takes about 5-6 minutes. When the preset frying temperature is reached, the yellow pilot light goes off.

If there are longer interruptions in the electricity distribution, the thermostat should be set to the 0 position. This should be done in order to prevent unexpected start-up of the pan when the electricity distribution is restored.

Due to the very short preheating time of the bratt pan, energy can be saved by not switching the pan on until the frying is started. If there is a longer pause during the frying, the bratt pan can be switched off or the temperature can be set to a lower value. Energy can also be saved by keeping the lid closed always when possible, for instance when simmering or stewing.

4.2.2. Setting of the frying temperature

The frying temperature can be changed by turning the thermostat knob to the desired temperature. When lowering the temperature, some time will be needed for the frying surface to cool down. Increasing of the temperature turns on the yellow pilot light. The new temperature is reached when the light goes off.

4.2.3. Frying temperature

Guiding temperatures for various products:

Fried eggs	150°C
Omelette	160°C
Fish	170°C
Bacon	150°C
Meat cubes	170°C
Meat balls, depending on size	130°C…170°C
Hamburgers, Depending on size	130°C…170°C
Veal fillet	170°C
Wiennasteak	170°C
Thin steak of veal	220°C
Broiler, big pieces	150°C
Floured slices of liver	170°C
Chops	170°C
Sausage cubes	130°C…150°C
Frankfurters	150°C
Fried potatoes	150°C…170°C
Mushrooms	130°C…150°C
Onion	140°C
Small pancakes	170°C

4.2.4. Tilting

Before tilting or returning the bratt pan bowl to the working position, check that nothing is in the movement area or leaning against the moving part of the bratt pan.

The tilting of the pan bowl is operated with a push button (Figure "Operating panel" in Section "Switching on the bratt pan").
To tilt pan bowl at desired angle push and hold "tilting" button. To return pan bowl to working (horizontal) position push and hold "return" button until pan bowl stop.
The pan cannot be tilted while the lid is closed.

When tilting the pan bowl, the heating is switched off and will be switched on again when the pan is in the horizontal position.

4.2.5. Filling the water

Filling the cold water is possible in bratt pan models with additional letter W included in model marking. These models have additional push button on the operating panel for the option (Figure "Operating panel" in Section"Switching on the bratt pan"). To fill the water push and hold button until required amount of water collected.
Filling the water is possible when lid of the bratt pan opened.

4.2.6. Adjustment the working height

Before adjusting the working height of the bratt pan, check that nothing is in the movement area or leaning against the moving part of the bratt pan.

Adjustment of working height is possible in bratt pan models with additional letter H included in model marking. These models have two additional push buttons on the operating panel for the option (Figure "Operating panel" in Section"Switching on the bratt pan").

Adjustment is not possible if pan bowl is in tilted position

4.3. After use

4.3.1. Cleaning

Burned deposits on the frying surface of the pan form an isolating layer which slows up the frying and creates poor frying results. A clean frying surface is a must for good-quality results.

180°C

ca. 135°C

The effect of burned deposits on the surface temperature: 2 mm of deposits lower the surface temperature with 24 %.
180°C about 135°C

Cleaning equipment: scraper, hard brush, scouring plate, towel, kitchen paper

Cleaning detergent: slightly alkaline detergent (pH 8-10)

Cleaning method: scraping, dry, wet, damp

Precleaning:
Scrape out frying remains and wipe out grease and loose remains with paper. When necessary, pour hot water into the pan and let soak.

Cleaning:
The inside of the pan is cleaned with a brush and hot water. Spots are removed with a scouring plate. Cleaning detergent should be used only for frying surfaces extremely covered with burned deposits, because it removes grease from the frying surface.
Inner and outer surfaces of the lid are cleaned with a brush and cleaning detergent solution.
The base and outer surfaces of the pan are cleaned with a brush and cleaning detergent solution and rinsed with water.
The frying surface of the pan is rinsed with hot water, dried by heating up and greased with salt-free grease. All other surfaces are rinsed and wiped dry.

Water usage on the control panel and the electric box must be avoided.

Use of a water hose or pressure cleaning jet is strictly forbidden.

In order to remain in good condition, the frying surface must be burned with salt-free grease when the pan is taken into use for the first time, and after that at intervals during use. This is especially necessary in connection with thorough cleaning.

4.3.2. Service

Switch the appliance off if it is damaged or is malfunctioning. Contact authorized service personnel using original spare parts for service of the appliance.

The appliance does not include any user serviceable parts inside. Service must be left to authorized service personnel.

5. Installation

5.1. Transporting and unpacking the bratt pan

The best way to move the bratt pan is to keep it in its own package as long as possible while it also protects the pan from outer damage. If it is necessary to unpack the pan, possible lifting must thereafter be done from the bottom frame of the base by using suitable spacers of wood. In order to avoid damage, it is not allowed to use the lid as a workbench during installation.

5.2. Positioning the bratt pan

The installation is started by mounting the installation frame by bolts to the floor considering a possible floor drain. The recommended distances needed for service are shown in the installation drawing. After this lift pan onto installation frame.

Thereafter the pan is adjusted into a horizontal position by turning the adjustable bolts. The correct position is checked from the frying surface, not from the outer edges of the pan.

When the bratt pan is on the correct location and in a horizontal position, support pillar must be bolted to the installation frame.

The bratt pan (without optional water tap) can be installed tight to rear wall. Two holes on the rear surface of support profile can be used for additional fixing of bratt pan to the rear wall. Refer to the installation drawing for details.

5.3. Electrical connections

In order to make eventual future service easier and to increase safety, a mains switch must be installed near the appliance. This switch must disconnect the appliance completely from the electrical supply network.

Connection terminals are inside of support pillar. Entry for connection cable is made through the bottom of the support pillar or through the grommet on the rear wall of the support pillar. In order to make the connection, the front panel of the support pillar must be removed. To remove front panel loose two screws and than move panel downward and then towards yourself.

For bratt pan with optional height adjustment entry for connection cable is made only through the bottom of the support pillar. In order to make the connection, the front panel of the support pillar must be removed. To remove front panel loose four screws and than move panel towards yourself. Connection terminals are behind internal front cover. Loose two screws and remove internal front cover to get access to the connection terminals.

5.4. Water connection

Connection to cold water supply must be made by pressure resistant hose (not included in delivery) fitted with G ¾ connector. The water connection must be fitted with shut-off valve and non-return valve (not included in delivery).

Rinse the water hose before making the water connection.

The length of water hose must be sufficient to compensate movement of connection point in up- and downward direction for bratt pan with optional adjustment.

5.5. Test-run

Besides the live electrical parts also look out for possible moving parts of the appliance (pan bowl and lid).

Make sure that the protective grease has been removed from the frying surface before taking the pan into use. See "Preparing the use".

After connecting the cable check the function of the bratt pan.

Check that
• when turning the thermostat knob, both the green and yellow pilot light goes on

The bratt is equipped with safety thermostat. Safety thermostat prevents bratt pan from overheating if main thermostat does not switch off heating elements.
After installation of the bratt pan during test-run check the condition of safety thermostat. If after turning the thermostat knob at desired temperature green pilot lamp goes on but yellow pilot lamp remains off than safety thermostat need to be reset. Contact an authorized service person to reset safety thermostat.

• the yellow pilot light goes off after a few minutes when the frying surface has reached the set temperature
• the limit switches of the heating work properly: when tilting the heating is switched off, the return movement stops when the pan reaches the base and the heating is switched on. If necessary, adjust the limit switches.
• before refitting the front panel , check that no wires in the base interfere with moving parts.

Refit the lower front panel.

6. Troubleshooting

If the appliance does not function, check the following:

• Has the appliance been used according to the instructions?
• Are all possibly removable parts refitted?
• Are the mains switch on the appliance or nearby - often on the wall - in the ON position?

If even this does not help, figure out in advance how to briefly describe the break-down and contact an authorized service person.

STOP The appliance does not include any user serviceable parts inside. Service must be left to authorized service personnel.

7. Technical specifications

Voltage codes

Product codes

Main and control circuit diagram T02711A3

Connection diagram T03463A3

Heating element connection T02712A3

Installation drawing basic model T03278D3

Installation drawing model W T03476B3

Installation drawing model HW T03477B3

Technical specification table

Voltage codes

Voltage code	Voltage
A	3/N/PE~400/230V 50Hz
B	~250V 16A 50Hz
C	3/N/PE~380/220V 50Hz
D	3/PE~200V 50-60Hz
F	2/PE 220–240V 50Hz
G	3/N/PE~415/240V 50Hz
H	3/PE~230V 50Hz
I	3/PE~220V 60Hz
J	3/PE~380 50Hz
K	3/PE~400V 50Hz
L	3/PE~415V 50Hz
M	3/PE~440V 60Hz
N	3/PE~460V 60Hz
O	3/PE~480V 60Hz
P	1/N/PE~220-240V 50Hz
R	2/PE~220-230V 60Hz

Product codes

Type codes	Full name	Description
60		
85		
Model codes		
DC	Prince DC	Pan depth 130 or 180mm with bottom made from construction steel
LC	Prince LC	Pan depth 90mm with bottom made from construction steel
Accessory codes		
S		Bottom of the bowl made from stainless (clad) steel
W		Water tap
H		Height adjustment

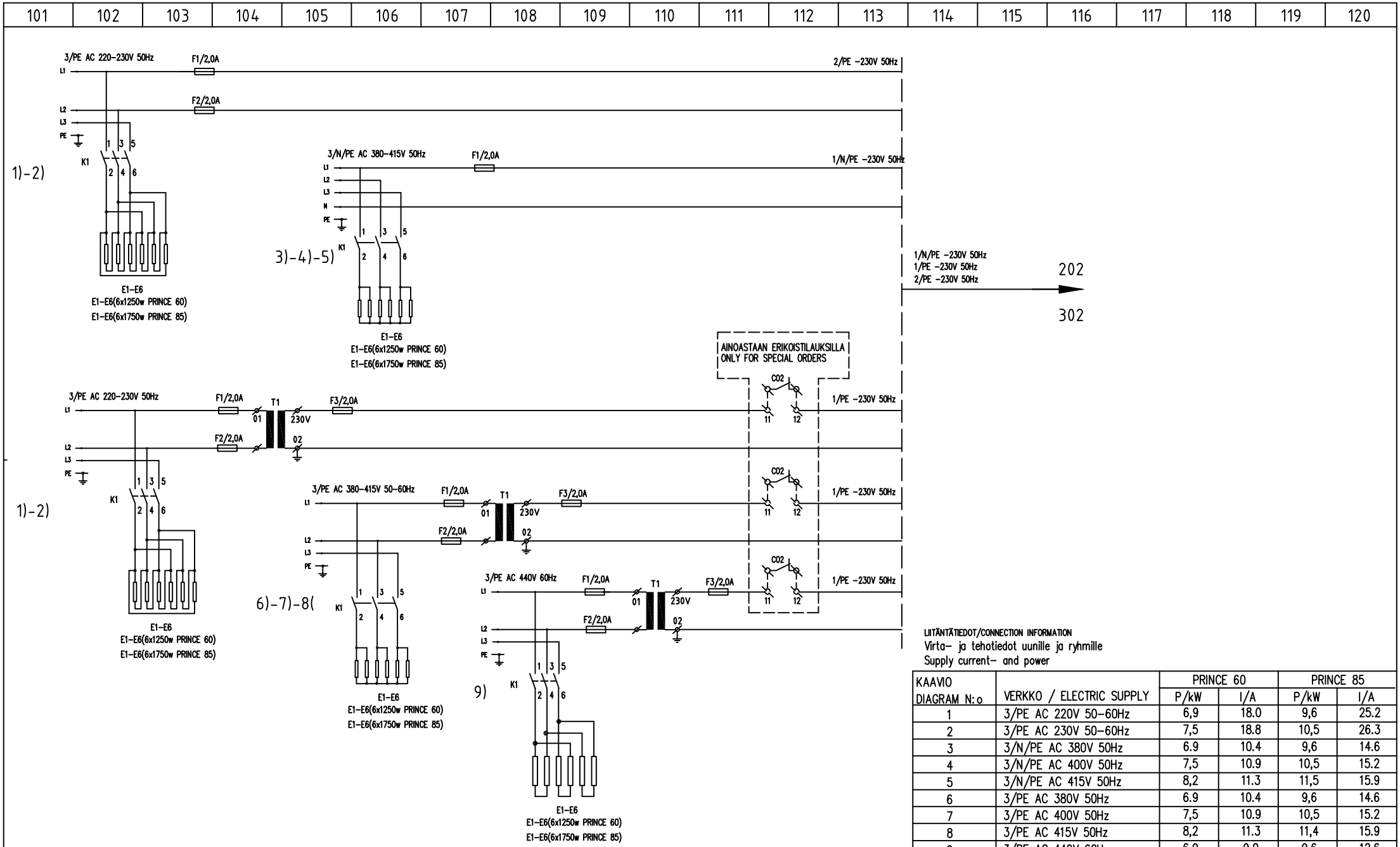

LIITÄNTÄTIEDOT/CONNECTION INFORMATION
Virta- ja tehotiedot uunille ja ryhmille
Supply current- and power

KAAVIO DIAGRAM N:o	VERKKO / ELECTRIC SUPPLY	PRINCE 60		PRINCE 85	
		P/kW	I/A	P/kW	I/A
1	3/PE AC 220V 50-60Hz	6,9	18.0	9,6	25.2
2	3/PE AC 230V 50-60Hz	7,5	18.8	10,5	26.3
3	3/N/PE AC 380V 50Hz	6.9	10.4	9,6	14.6
4	3/N/PE AC 400V 50Hz	7,5	10.9	10,5	15.2
5	3/N/PE AC 415V 50Hz	8,2	11.3	11,5	15.9
6	3/PE AC 380V 50Hz	6.9	10.4	9,6	14.6
7	3/PE AC 400V 50Hz	7,5	10.9	10,5	15.2
8	3/PE AC 415V 50Hz	8,2	11.3	11,4	15.9
9	3/PE AC 440V 60Hz	6,9	9.0	9.6	12.6

-HACKMAN-
METOS

Teki DESING	07.12.2011/A.O	PAISTINPANNU PRINCE 60,60H,85,85H
Tark. CHKD		BRATT PAN PRINCE 60,60H,85,85H
Hyv. APPR		STEKBORD PRINCE 60,60H,85,85H

Kytkentäkaavio
Connection diagram
Kopplingsschema

3/PE AC 220-230V 50Hz
3/N/PE AC 380-415V 50Hz
3/PE AC 380-440V 50-60Hz

Typ nro PROJ.NR			
Tiedosto FILE	T02711A3	Lehti SHEET	3/1
Piir. nro DWG NR	T02711A3	REV	

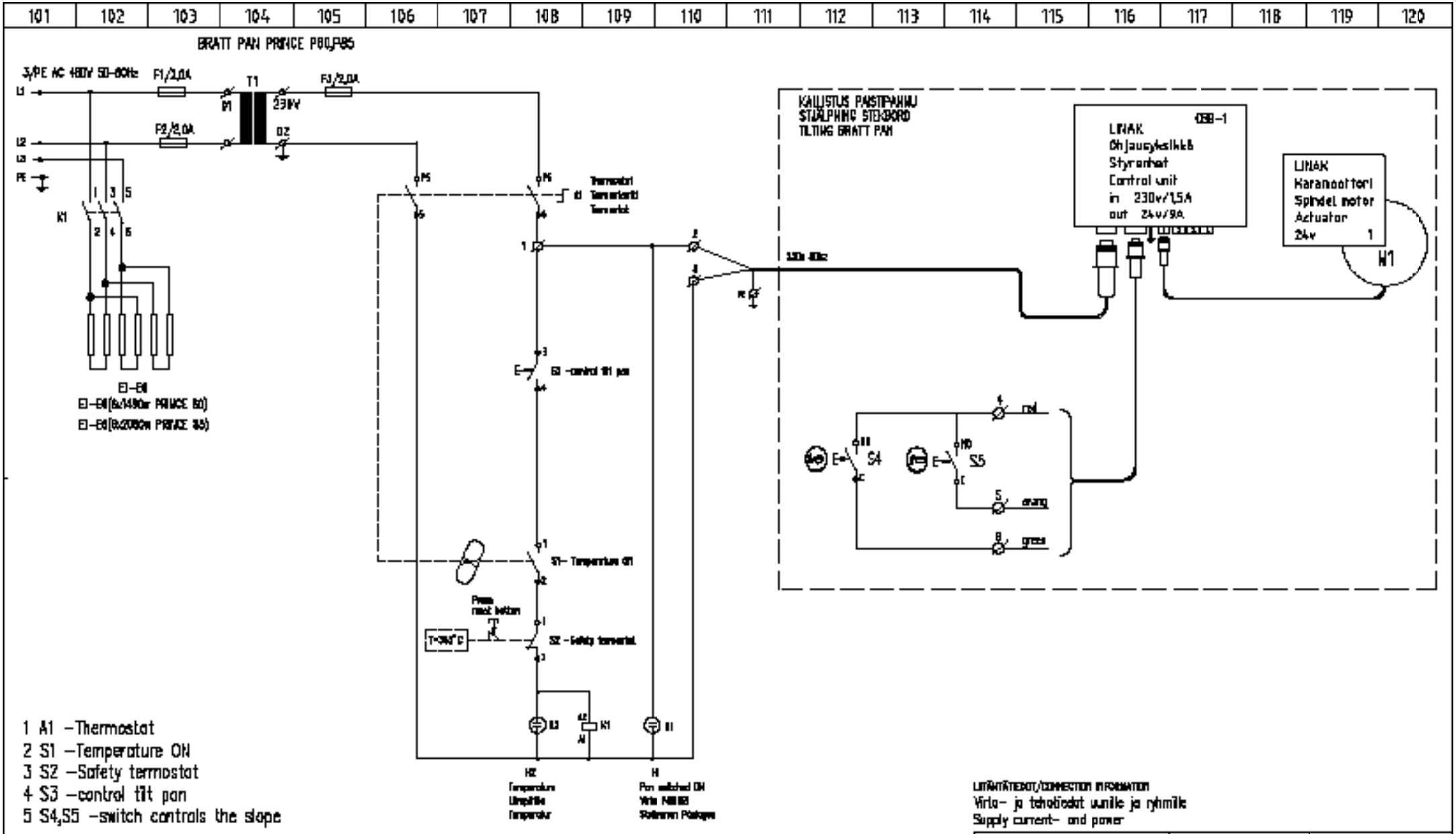
101 102 103 104 105 106 107 108 109 110 111 112 113 114 115 116 117 118 119 120
BRATT PAN PRINCE P80,P85
3/PE AC 480V 50-60Hz
F1/2,0A
F2/2,0A
F3/2,0A
T1
230V
K1
S3 -control tilt pan
S1- Temperature ON
S2 -Safety termostat
KALLISTUS PANSTINPANNU
STÄLPNING STEKBORD
TILTING BRATT PAN
LINAK
Ohjausyksikkö
Styrenhet
Control unit
in 230v/1,5A
out 24v/9A
LINAK
Karamoottori
Spindel motor
Actuator
24v
M1
S4
S5
red
orang
green
1 A1 -Thermostat
2 S1 -Temperature ON
3 S2 -Safety termostat
4 S3 -control tilt pan
5 S4,S5 -switch controls the slope
LIITÄNTÄTIEDOT/CONNECTION INFORMATION
Virta- ja tehotiedot uunile ja rynnille
Supply current- and power
VERKKO / ELECTRIC SUPPLY
PRINCE 80
PRINCE 85
P/kW
I/A
3/PE AC 480V 50-60Hz
9,0
10,7
12,5
15,0
-HACKMAN-
METOS
PANSTINPANNU PRINCE 60,85
BRATT PAN PRINCE 60,85
STEKBORD PRINCE 60,85
Kytkentäkaavio
Connection diagram
Kopplingsschema
3/PE AC 480V 50-60Hz
T03463A3
T03463A3

BRATT PAN PRINCE P60,P85 without adjustment Heigh

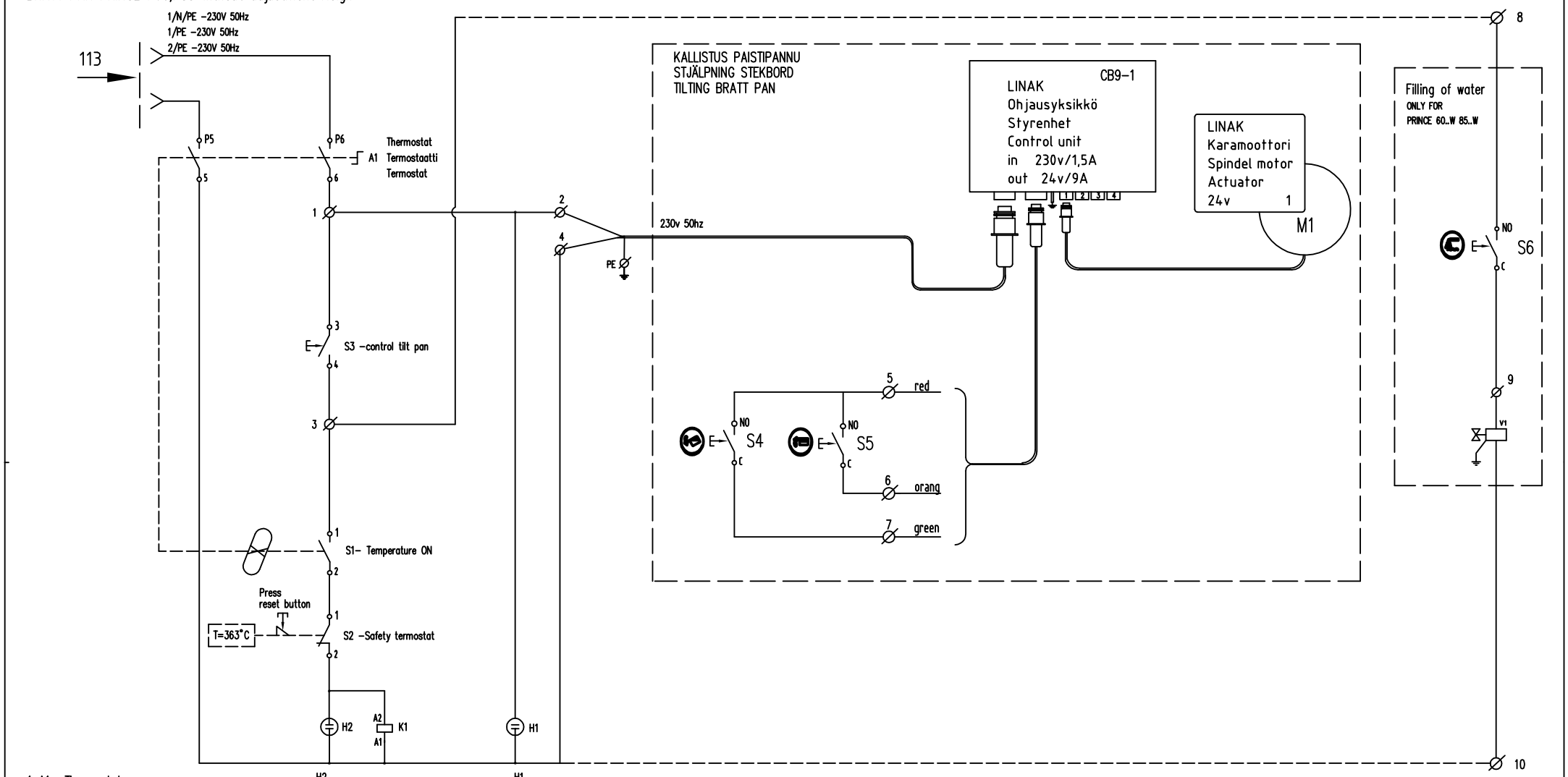

1 A1 -Thermostat
2 S1 -Temperature ON
3 S2 -Safety termostat
4 S3 -control tilt pan
5 S4,S5 -switch controls the slope
6 S6-switch filling of water
7 V1 -valve filling of water

H2
Temperature
Lämpötila
Temperatur

H1
Pan switched ON
Virta Päällä
Strömmen Påslagen

-HACKMAN- METOS	Teki DESING 07.12.2011/A.O	PAISTINPANNU PRINCE 60,85 BRATT PRINCE 60,85 STEKBORD PRINCE 60,85	Kytkentäkaavio Connection diagram Kopplingsschema	3/PE AC 220-230V 50Hz 3/N/PE AC 380-415V 50Hz 3/PE AC 380-440V 50-60Hz	Typ nro PROJ.NR
	Tark. CHKD				Tiedosto FILE T02711A3 — Lehti SHEET 3/2
	Hyv. APPR				Piir. nro DWG NR T02711A3 — REV

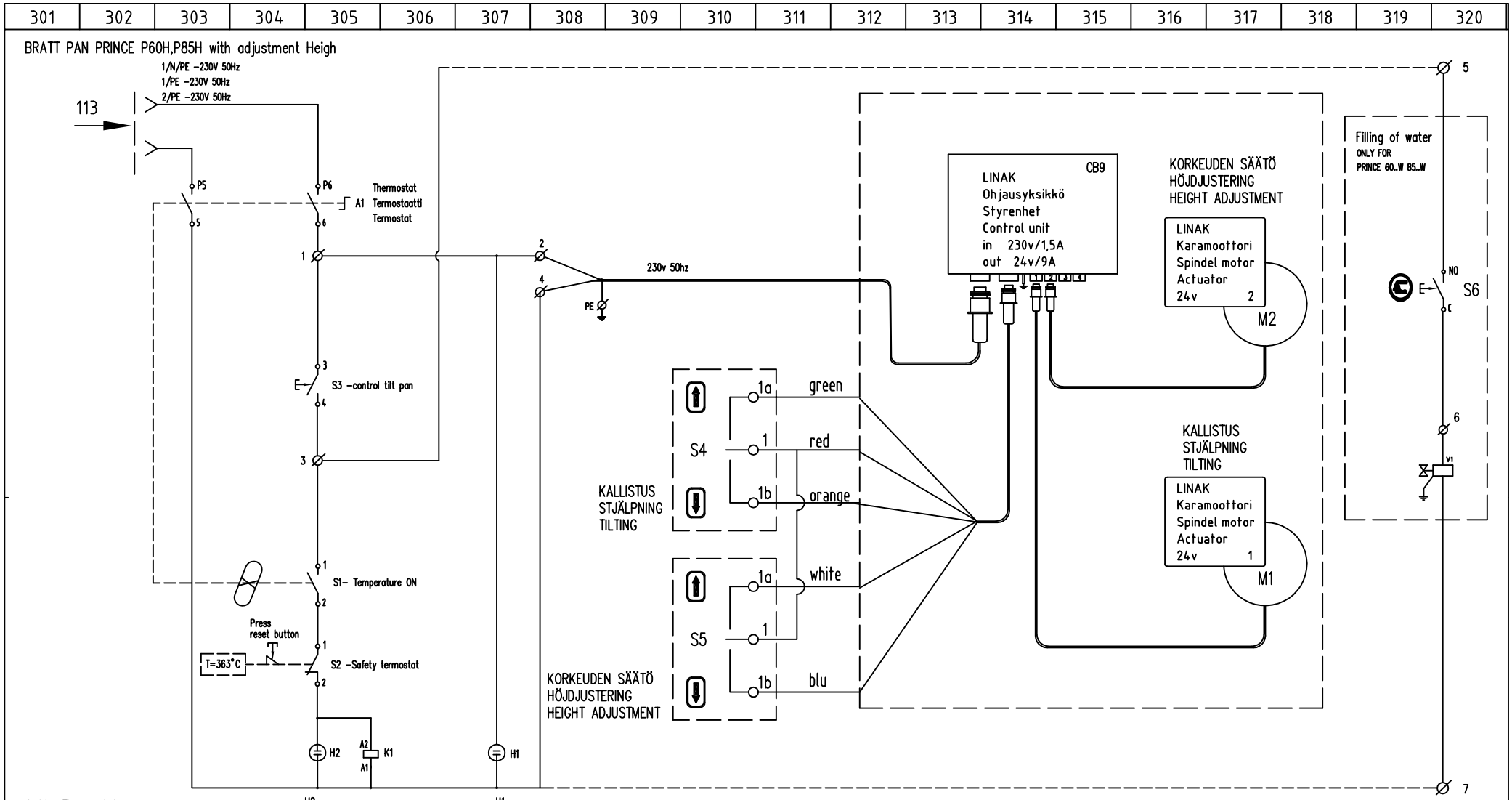

1 A1 –Thermostat
2 S1 –Temperature ON
3 S2 –Safety termostat
4 S3 –control tilt pan
5 S4 –switch controls the slope
6 S5 –switch height adjustment
7 S6 –switch filling of water
8 V1 –valve filling of water

H2
Temperature
Lämpötila
Temperatur

H1
Pan switched ON
Virta Päällää
Strömmen Påslagen

–HACKMAN– METOS	Teki DESING 07.12.2011/A.O Tark. CHKD Hyv. APPR	PAISTINPANNU PRINCE P60H,P85H BRATT PAN PRINCE P60H,P85H STEKBORD PRINCE P60H,P85H	Kytkentäkaavio Connection diagram Kopplingsschema	3/PE AC 220–230V 50Hz 3/N/PE AC 380–415V 50Hz 3/PE AC 380–440V 50–60Hz	Typ nro PROJ.NR Tiedosto FILE T02711A3 Piir. nro DWG NR T02711A3 Lehti SHEET 3/3 REV

101	102	103	104	105	106	107	108	109	110	111	112	113	114	115	116	117	118	119	120

CONNECTION DIAGRAM FOR HEATING ELEMENTS
VASTUKSIEN KYTKENTÄOHJE ERI JÄNNITEJÄRJESTELMILLÄ

3/PE 220-230V 50Hz

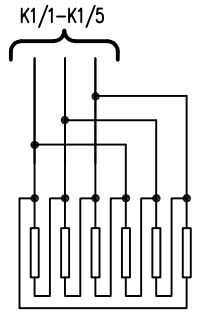

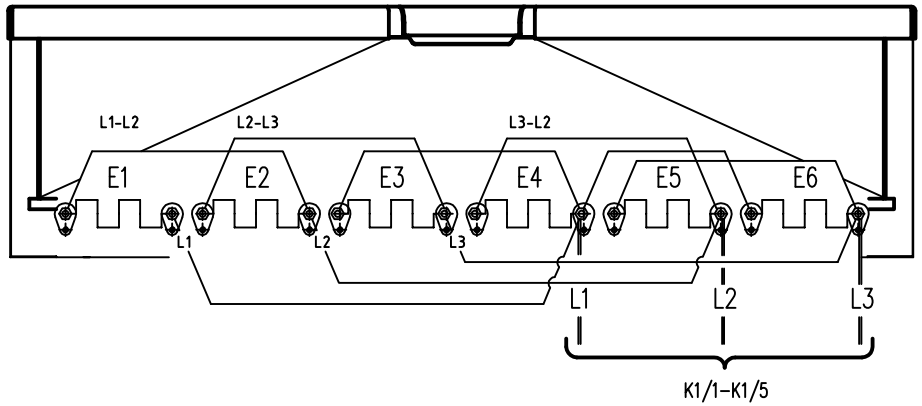

3/N/PE 380-415V 50Hz
3/PE 380-415V 50Hz

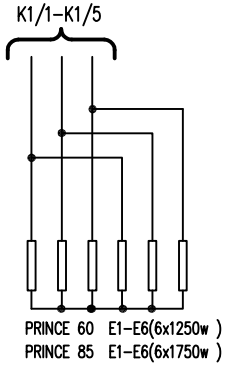

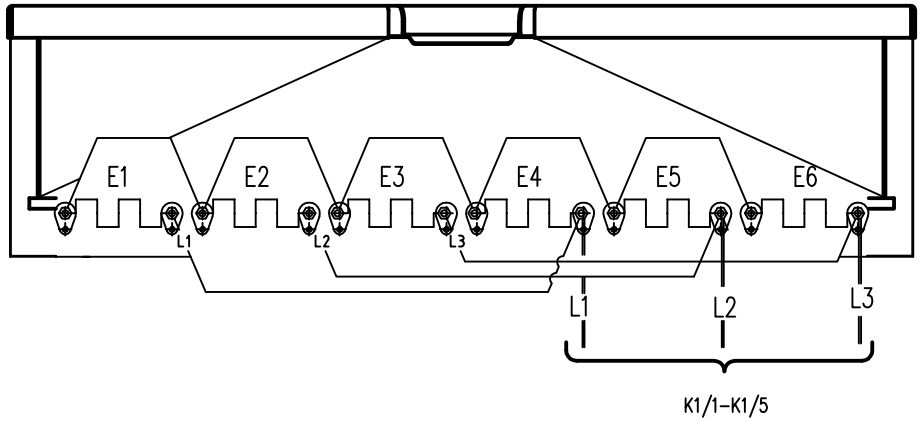

3/PE 440V 60Hz

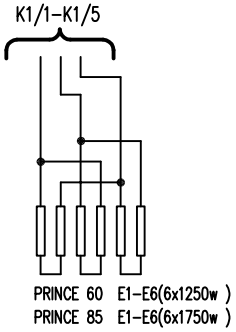

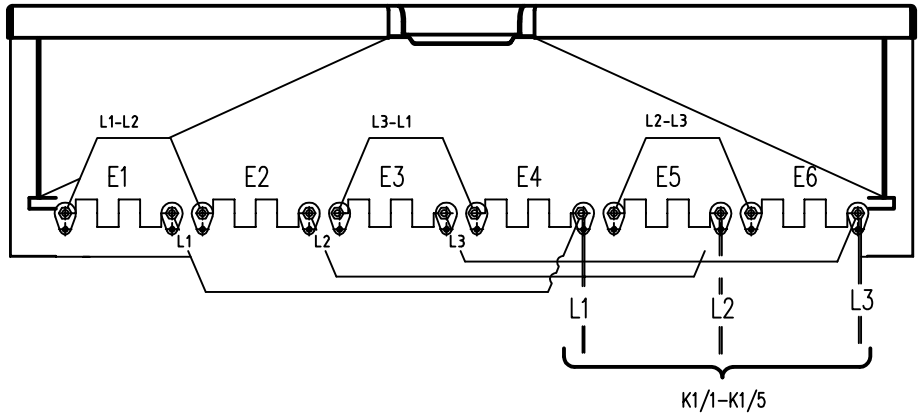

3/PE 220-230V 50Hz

3/N/PE 380-415V 50Hz
3/PE 380-415V 50Hz

3/PE 440V 50-60Hz

HACKMAN METOS	Teki DESING 06.10.2011/A.O Tark. CHKD Hyv. APPR	PAISTINPANNU PRINCE 60,85 BRATT PAN PRINCE 60,85 STEKBORD PRINCE 60,85	Kytkentäkaavio Connection diagram Kopplingsschema	3/PE AC 220-230V,50Hz 3/N/PE AC 380-415V,50Hz 3/PE AC 380-415V,50Hz 3/PE AC 440V,60Hz	Typ nro PROJ.NR Tiedosto FILE T02712A3 LehtI SHEET 1/1 Piir. nro DWG NR T02712A3 REV

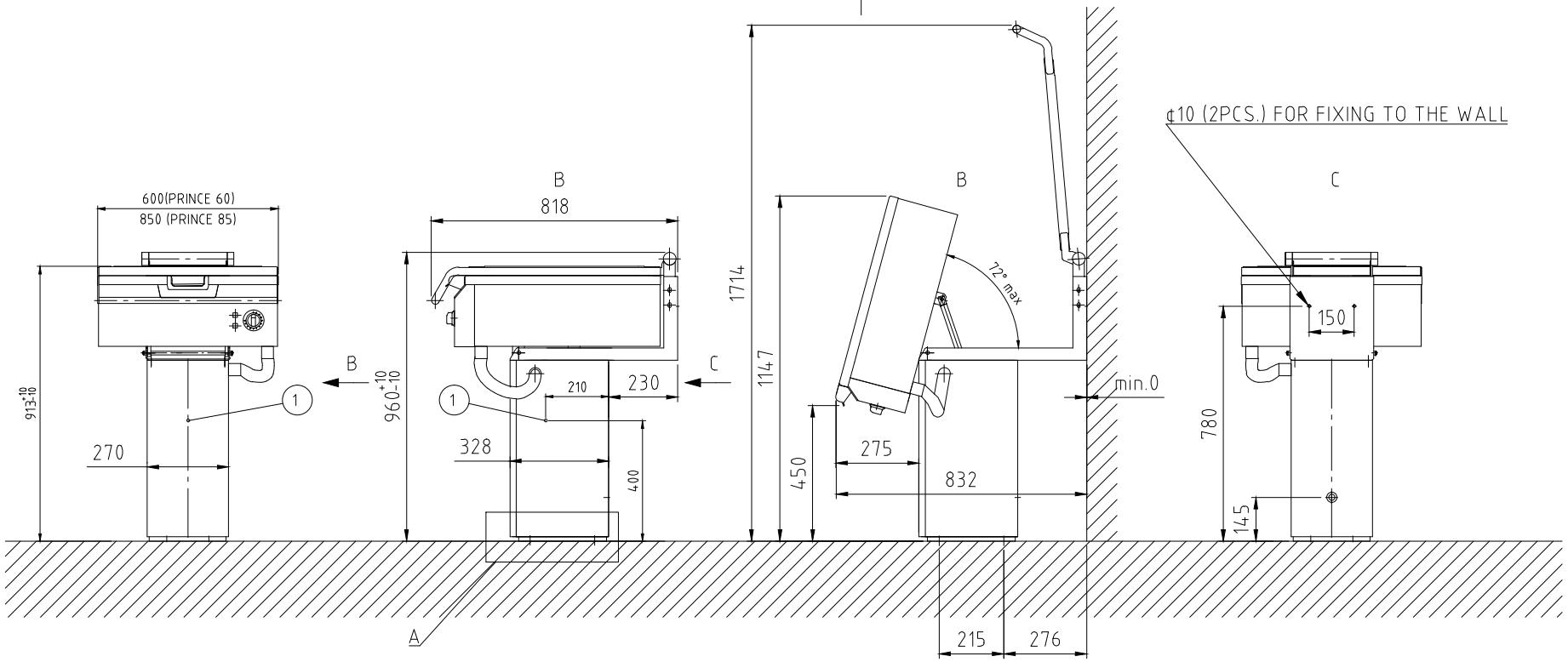

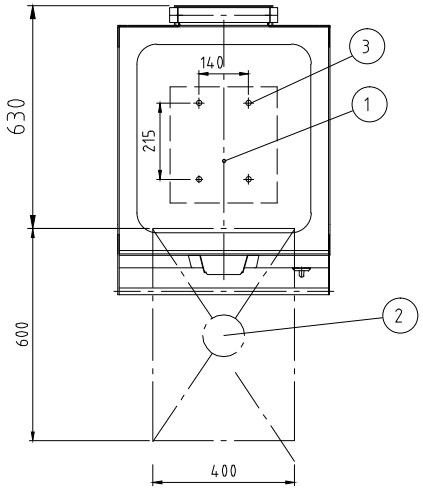

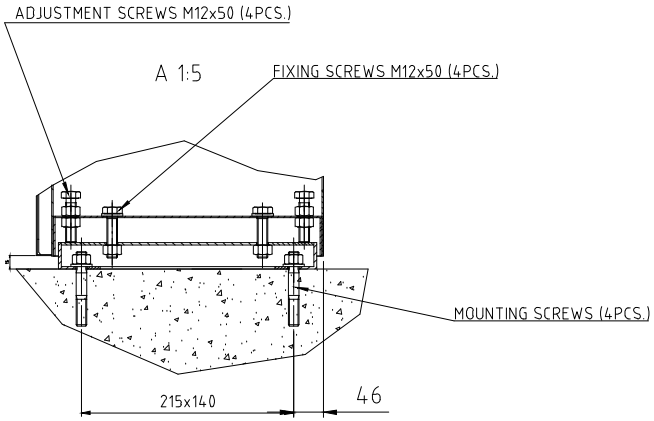

	PRINCE 60				PRINCE 85				
ELECTRIC SUPPLY	P/kW	I/A	FUSE/A	Power cable (number of cores x mm2 per conductor)	P/kW	I/A	FUSE/A	Power cable (number of cores x mm2 per conductor)	Membrane grommets size
3/PE AC 220V 50-60Hz	6,9	18,0	3x20	4G2,5	9,6	25,2	3x32	4G2,5	DGC 21
3/PE AC 230V 50-60Hz	7,5	18,8	3x20	4G2,5	10,5	26,3	3x32	4G4	DGC 21
3/N/PE AC 380V 50Hz	6,9	10,4	3x13	5G1,5	9,6	14,6	3x16	4G1,5	DGC 21
3/N/PE AC 400V 50Hz	7,5	10,9	3x13	5G1,5	10,5	15,2	3x16	4G1,5	DGC 21
3/N/PE AC 415V 50Hz	8,2	11,3	3x13	5G1,5	11,5	15,9	3x20	4G1,5	DGC 21
3/PE AC 380V 50Hz	6,9	10,4	3x13	4G1,5	9,6	14,6	3x16	4G1,5	DGC 21
3/PE AC 400V 50Hz	7,5	10,9	3x13	4G1,5	10,5	15,2	3x16	4G1,5	DGC 21
3/PE AC 415V 50YZ	8,2	11,3	3x13	4G1,5	11,4	15,9	3x20	4G1,5	DGC 21
3/PE AC 440V 50-60Hz	6,9	9,0	3x10	4G1,5	9,6	12,6	3x16	4G1,5	DGC 21

1. Electric connection
2. FLOOR DRAIN 400x600mm (NOT INCLUDED IN DELIVERY)
3. HOLES FOR MOUNTING SCREWS ¢ 14mm (MOUNTING SCRWES NOT INCLUDED IN DELIVERY).
4. REQUIMENTS GIVEN IN INSTALLATION MANUAL ALSO MUST BE FOLLOWED.

FILE NAME		SHEET	SCALE 1:15
DRAWN VABO	FRYING PAN PRINCE60, PRINCE85 INSTALLATION DRAWING	DWG NO	T03278C3
APPR.			

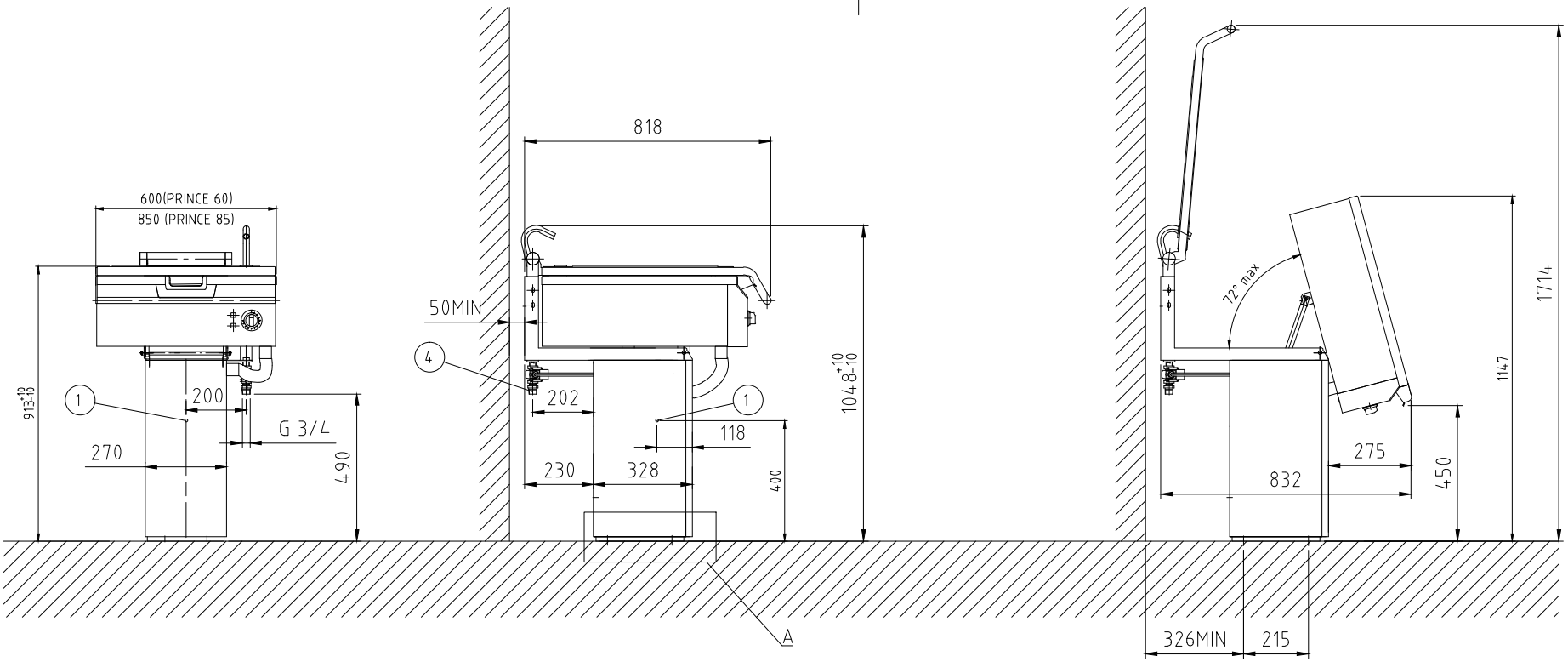

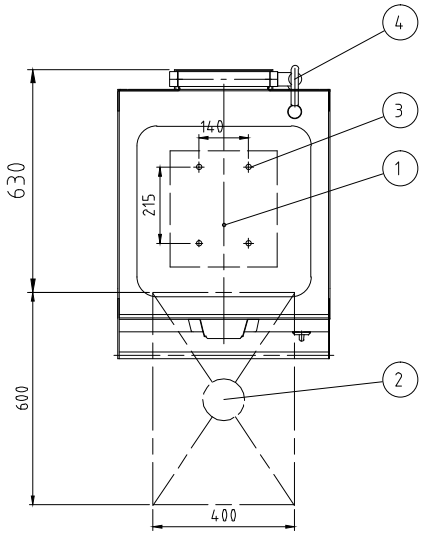

A 1:5

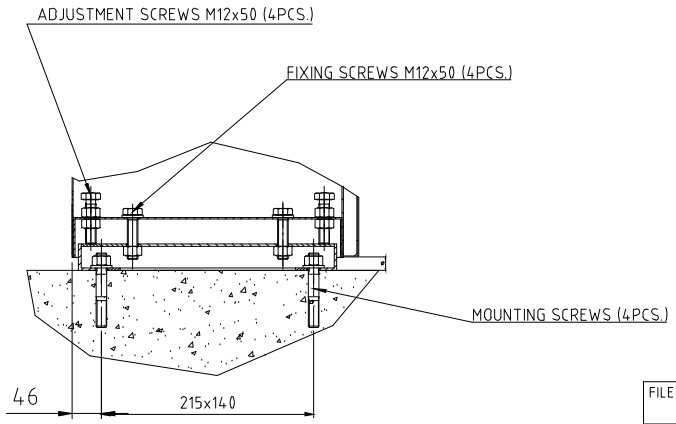

PRINCE 60					PRINCE 85				
ELECTRIC SUPPLY	P/kW	I/A	FUSE/A	Power cable (number of cores x mm2 per conductor)	P/kW	I/A	FUSE/A	Power cable (number of cores x mm2 per conductor)	Membrane grommets size
3/PE AC 220V 50-60Hz	6,9	18,0	3x20	4G2,5	9,6	25,2	3x32	4G2,5	DGC 21
3/PE AC 230V 50-60Hz	7,5	18,8	3x20	4G2,5	10,5	26,3	3x32	4G4	DGC 21
3/N/PE AC 380V 50Hz	6,9	10,4	3x13	5G1,5	9,6	14,6	3x16	4G1,5	DGC 21
3/N/PE AC 400V 50Hz	7,5	10,9	3x13	5G1,5	10,5	15,2	3x16	4G1,5	DGC 21
3/N/PE AC 415V 50Hz	8,2	11,3	3x13	5G1,5	11,5	15,9	3x20	4G1,5	DGC 21
3/PE AC 380V 50Hz	6,9	10,4	3x13	4G1,5	9,6	14,6	3x16	4G1,5	DGC 21
3/PE AC 400V 50Hz	7,5	10,9	3x13	4G1,5	10,5	15,2	3x16	4G1,5	DGC 21
3/PE AC 415V 50YZ	8,2	11,3	3x13	4G1,5	11,4	15,9	3x20	4G1,5	DGC 21
3/PE AC 440V 50-60Hz	6,9	9,0	3x10	4G1,5	9,6	12,6	3x16	4G1,5	DGC 21

1. Electric connection
2. FLOOR DRAIN 400x600mm (NOT INCLUDED IN DELIVERY)
3. HOLES FOR MOUNTING SCREWS ¢ 14mm (MOUNTING SCRWES NOT INCLUDED IN DELIVERY).
4. Cold water connection.
5. REQUIMENTS GIVEN IN INSTALLATION MANUAL ALSO MUST BE FOLLOWED.

FILE NAME		SHEET	SCALE 1:15
DRAWN VABO	FRYING PAN PRINCE60W, PRINCE85W	DWG NO	
APPR.	INSTALLATION DRAWING	T03476B3	

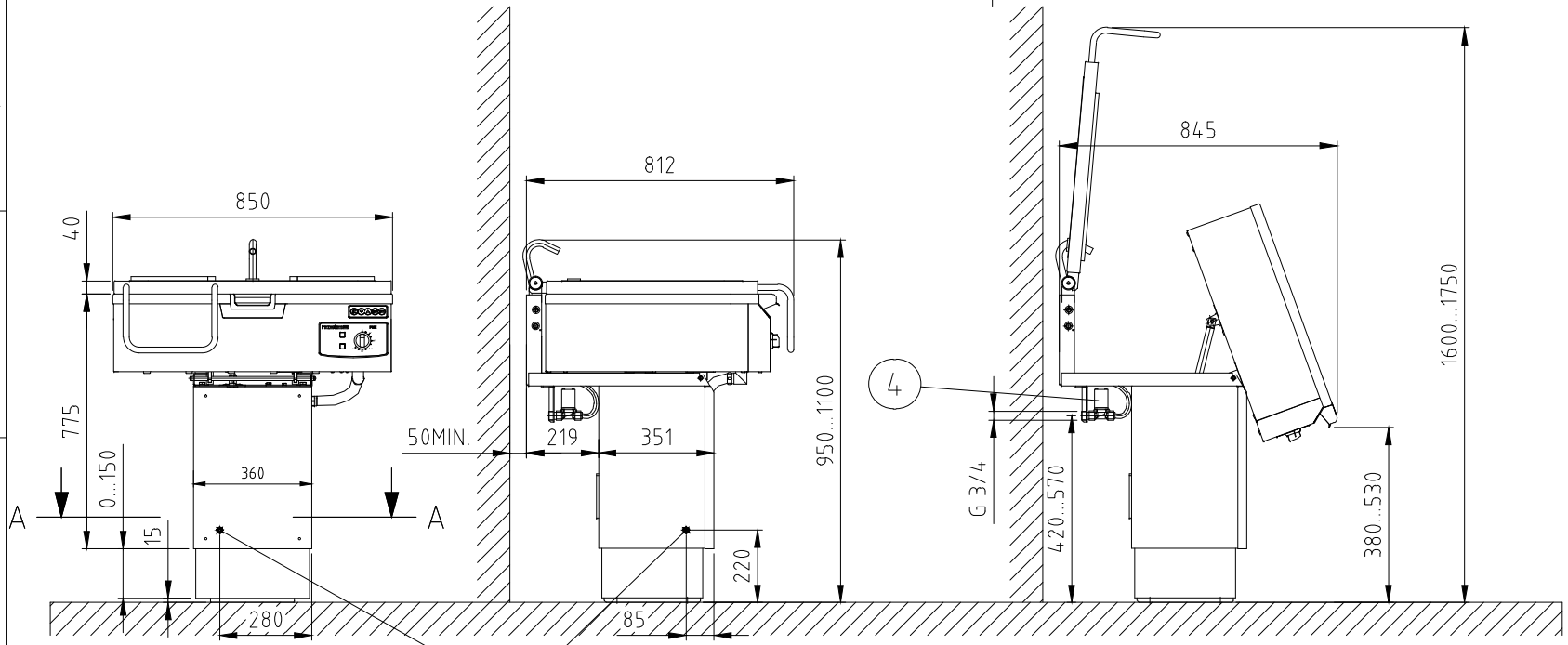

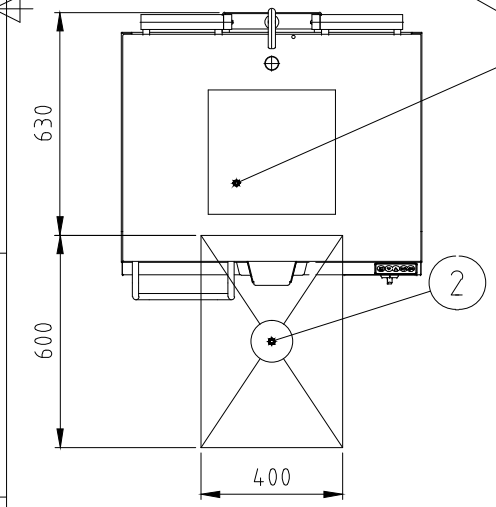

A-A (1:5)

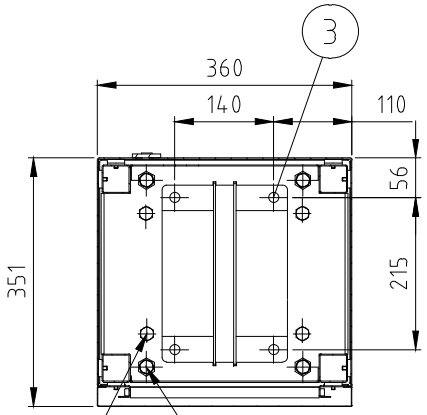

FIXING SCREW M12x80 (4pcs.)

ADJUSTMENT SCREW 12x80 (4pcs.)

PRINCE 85					
ELECTRIC SUPPLY	P/kW	I/A	FUSE/A	Power cable (number of cores x mm2 per conductor)	Membrane grommets size
3/PE AC 220V 50-60Hz	9,6	25,2	3x32	4G2,5	DGC 21
3/PE AC 230V 50-60Hz	10,5	26,3	3x32	4G2,5	DGC 21
3/N/PE AC 380V 50Hz	9,6	14,6	3x16	5G1,5	DGC 21
3/N/PE AC 400V 50Hz	10,5	15,2	3x16	5G1,5	DGC 21
3/N/PE AC 415V 50Hz	11,5	15,9	3x20	5G1,5	DGC 21
3/PE AC 380V 50Hz	9,6	14,6	3x16	4G1,5	DGC 21
3/PE AC 400V 50Hz	10,5	15,2	3x16	4G1,5	DGC 21
3/PE AC 415V 50YZ	11,4	15,9	3x20	4G1,5	DGC 21
3/PE AC 440V 50-60Hz	9,6	12,6	3x16	4G1,5	DGC 21

1. Electric connection
2. FLOOR DRAIN 400x600mm (NOT INCLUDED IN DELIVERY)
3. HOLES FOR MOUNTING SCREWS ¢ 14mm (MOUNTING SCRWES NOT INCLUDED IN DELIVERY).
4. COLD WATER CONNECTION.
5. REQUIMENTS GIVEN IN INSTALLATION MANUAL ALSO MUST BE FOLLOWED.

FILE NAME		SHEET	SCALE 1:15
DRAWN VABO	FRYING PAN PRINCE 85HW (K-edition)	DWG NO	
APPR.	INSTALLATION DRAWING	T03477B3	

Technical specifications table

Item	Model	Type	Voltage	Specification
Dimensions WxDxH		60		600x818x960 mm*
Dimensions WxDxH		85		850x818x960 mm*
Package dimensions WxDxH		60		720x920x1200 mm
Package dimensions WxDxH		85		970x920x1200 mm
Frying zones		60,85		1pc
Heigh of frying zone sides, shallow pan	L	60		90mm
Heigh of frying zone sides, deep pan	D	60		130mm
Heigh of frying zone sides,shallow pan	L	85		90mm
Heigh of frying zone sides, deep pan	D	85		180mm
Frying surface WxD		60		540x530 mm
Frying surface WxD		85		790x530 mm
Geometrical volume of the pan, shallow pan	L	60		25L
Geometrical volume of the pan, deep pan	D	60		37L
Geometrical volume of the pan, shallow pan	L	85		37L
Geometrical volume of the pan, deep pan	D	85		75L
Temperature setting range				50°C…250°C
Weigh without package		60		111 kg
Weigh without package		85		134kg
Weigh with package		60		131kg
Weigh with package		85		154kg
Material of frying surface				Steel or stainless steel (on request)
Material of frying zone sides				Stainless steel
Outer surface				Stainless steel
Power		60	C,I,J,M	6,9kW
Power		60	A,H,K	7,5kW
Power		60	G,L	8,2kW
Power		85	C,I,J,M	9,6kW
Power		85	A,H,K	10,5kW
Power		85	G,L	11,4kW
Operating conditions				Normal commercial kitchens conditions, temperature above 0°C

* Dimensions for basic version. Refer to the installation drawings to view dimensions with H and W options.

METOS AS

VAATIMUSTENMUKAISUUSVAKUUTUS
FÖRSÄKRAN OM ÖVERENSSTÄMMELSE
DECLARATION OF CONFORMITY

Valmistajan nimi / Tillverkarens namn / Manufacturer's name
METOS AS

Osoite / Adress / Adress
VALUKOJA 16
11415 TALLINN
ESTONIA

Vakuuttaa, että seuraava tuote / Försäkrar att följande produkt / Declare that the following product

Nimi, tyyppi tai malli / Namn, typ eller modell / Name, type or model
Paistipannu / Stekbord/ Bratt Pan METOS PRINCE -sarja / serien / series
60, 85
with accessories:
height adjustment, water tap, stainless steel bottom

on seuraavien direktiivien asiaankuuluvien säännösten mukainen / överensstämmer med tillämpliga bestämmelser i följande direktiv / is in conformity with the relevant provisions of the following directives

MD 2006/42/EC, LVD 2006/95/EC, EMC 2004/108/EC, RoHS 2002/95/EC, WEEE2002/96/EC

ja lisäksi vakuuttaa, että seuraavia yhdenmukaistettuja standardeja (tai niiden osia/kohtia) on sovellettu / och försäkrar dessutom att följande harmoniserade standarder (eller delar/paragrafer) har använts / and furthermore declares that the following harmonised standards (or parts/clauses) have been used

EN ISO 12100-1, EN ISO 12100-2

ja lisäksi vakuuttaa, että seuraavia muita standardeja (tai niiden osia/kohtia) on sovellettu / och försäkrar dessutom att följande andra standarder (eller delar/paragrafer) har använts / and furthermore we declare that the following other standards (or parts/clauses) have been used

EN 60204-1, EN 60335-1, EN 60335-2-39

Alla mainittu henkilö on valtuutettu kokoamaan teknisen tiedoston / Nedan nämda person är bemyndigad att sammanställa den tekniska dokumentfilen / The person mentioned below is authorized to compile the technical file

Valeri Bogoslovtsev Metos AS, Valukoja 16, 11415 Tallinn, Estonia

Antopaikka ja päivä / Utfärdad på ort och datum / Place and date of issue
Tallinn 09.01.2012

Valtuutetun henkilön nimi ja asema / Bemyndigad persons namn och befattning / Name and title of authorized person

Andres Kirstein – Managing Director

Jaan Muru – Production Manager

metos
kitchen intelligence®