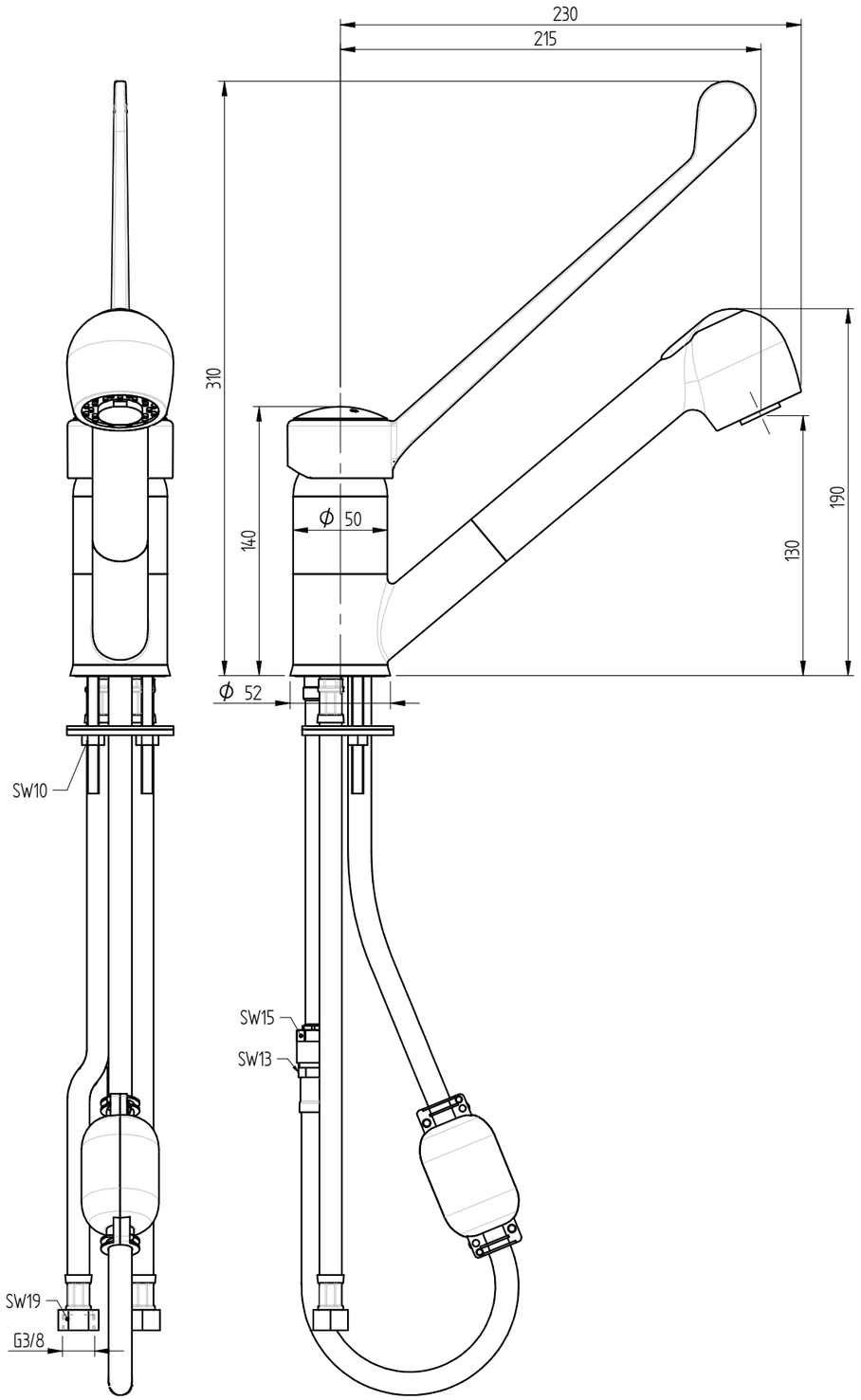

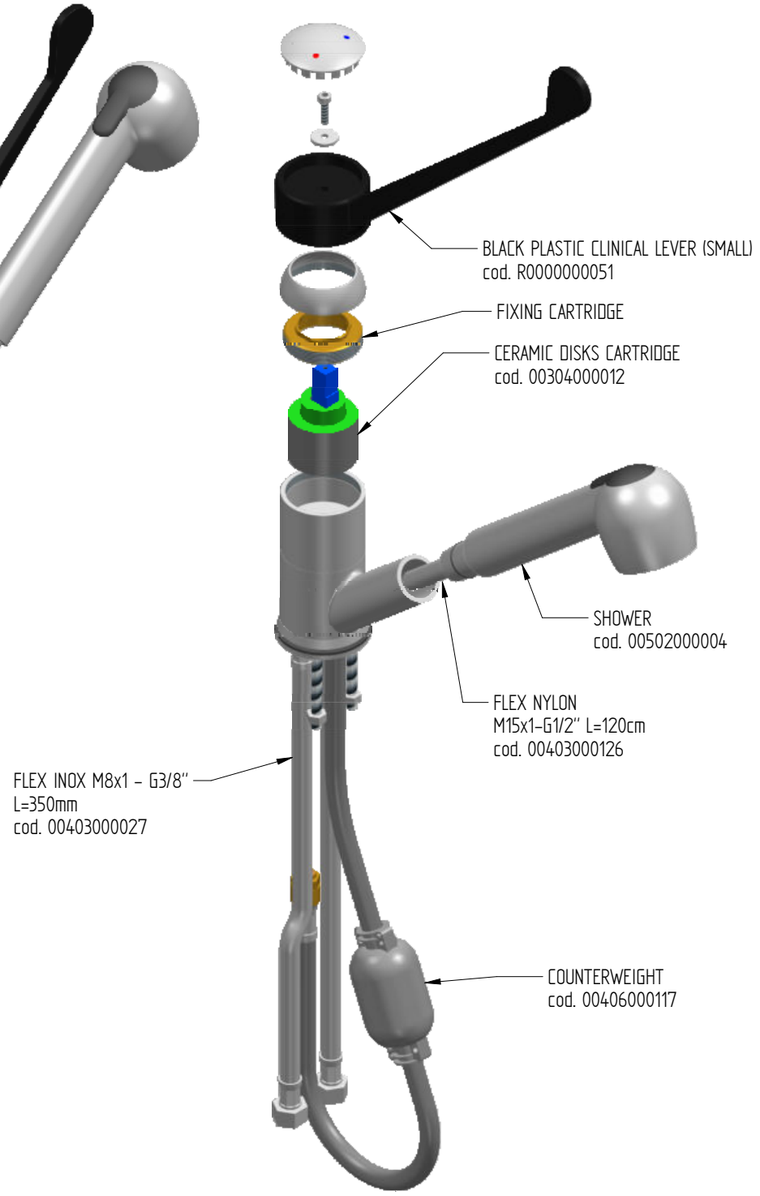

FLOW RATE : 9 L/min at 3,5 BAR with aerated shower jet
9 L/min at 3,5 BAR with spray shower jet

sink fixing hole : ø32mm (maximum)

Shares without tolerance according to standard **UNI-EN-22768-1-m**	DESCRIPTION ONE HOLE SINK MIXER TAP WITH SMALL BLACK PLASTIC CLINICAL LEVER AND EXTRACTABLE SHOWER		CODE R0201020225
SIZE A3	European Projection		WEIGHT 1,85 Kg
DATE 03-09-2018	SCALE 1:3	MONOLITH DESIGN AND TECHNOLOGICAL RESEARCH FOR WATER	
DRAWN PICCOLO M.			
VALIDATE PICCOLO M.		VIA DELL'ARTIGIANO 8/F-8-G , 31050 MONASTIER di TREVISO (TV) tel: 0422 842157 - fax: 0422 708978	

DONE WITH DESIGN CAD - PROHIBITED THE CHANGES MANUAL

Rev. 01 - 22/05/2020