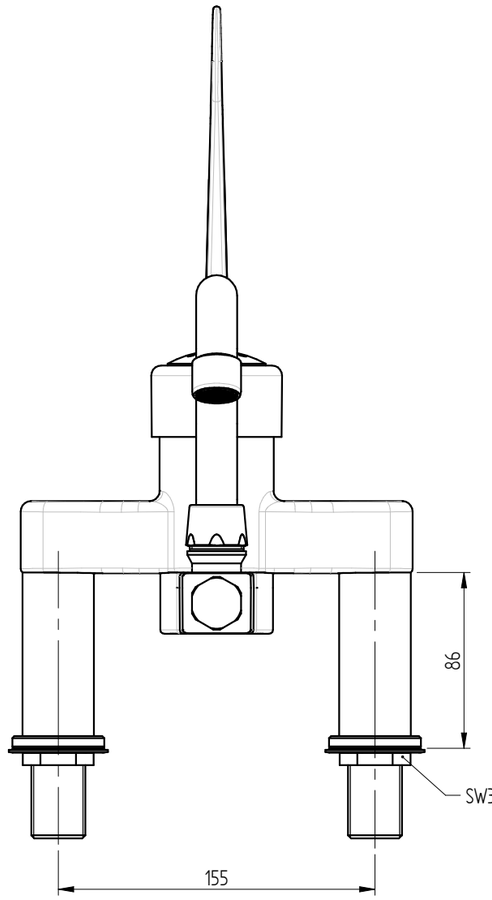

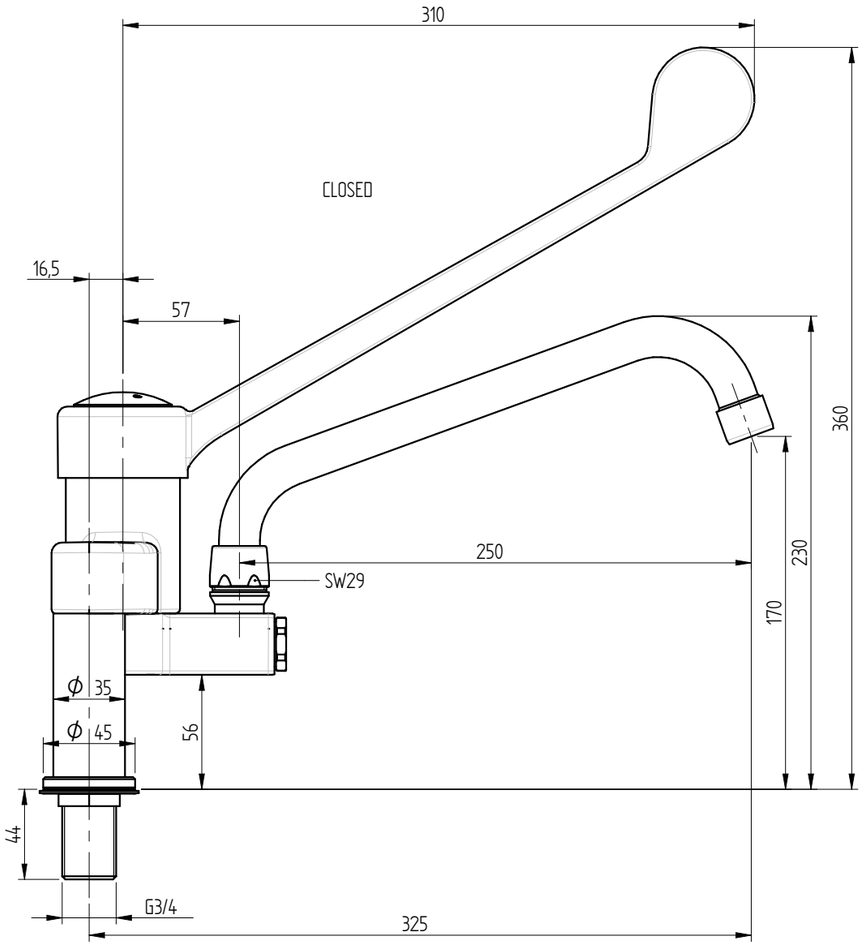

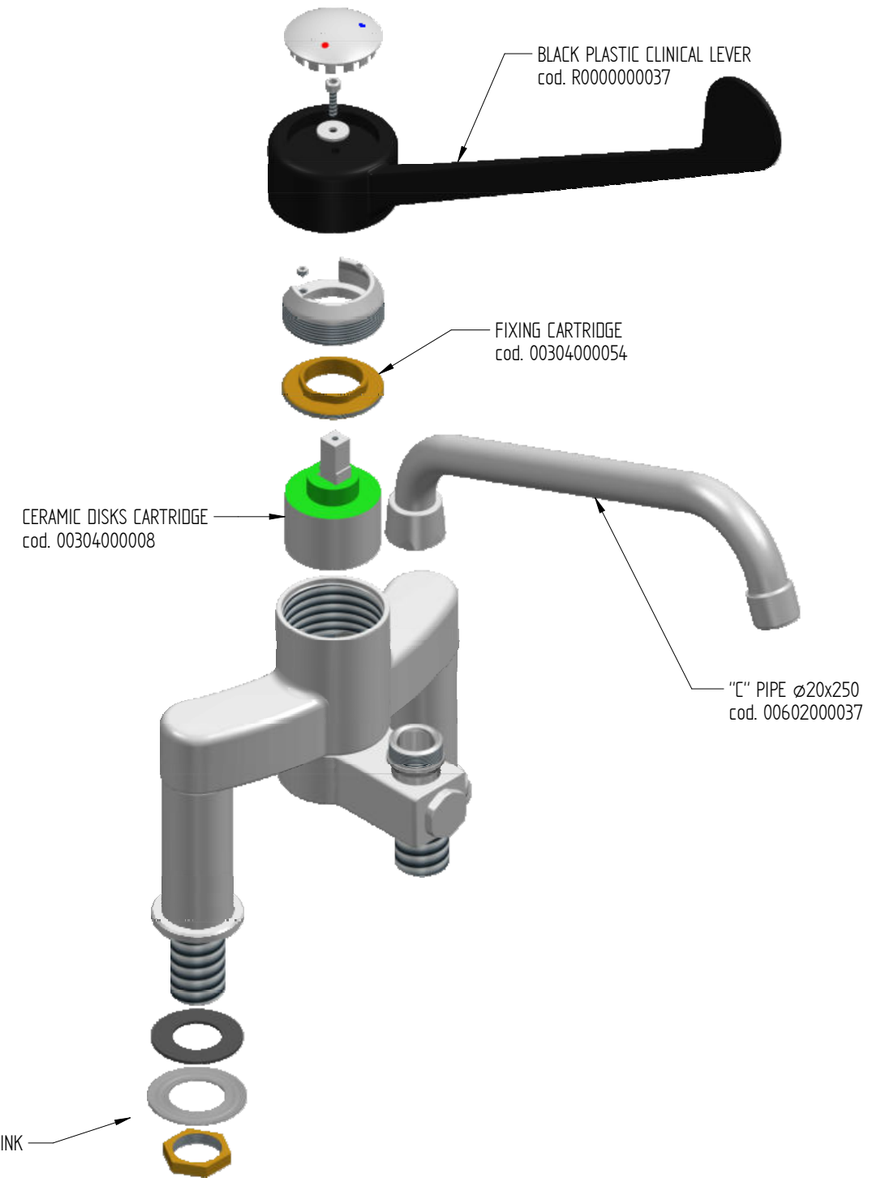

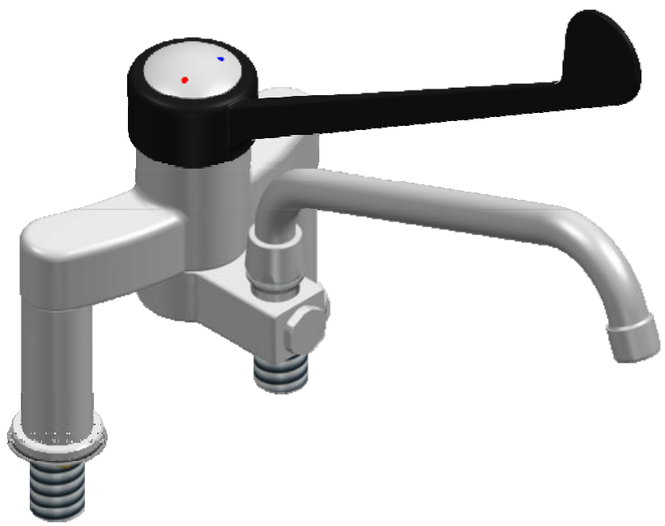

FLOW RATE : 15 L/min at 3,5 BAR

sink fixing holes : ø27 mm

Shares without tolerance according to standard **UNI-EN-22768-1-m**	DESCRIPTION	CODE
SIZE A3 / European Projection	TWO HOLES MIXER SINK WITH SWINGING SPOUT AND PLASTIC (PA6) CLINICAL LEVER. 155mm WHEELBASE	R0102020206
DATE 25-09-2018 / SCALE 1:3		WEIGHT 3,77 Kg
DRAWN PICCOLO M.	MONOLITH DESIGN AND TECHNOLOGICAL RESEARCH FOR WATER	
VALIDATE PICCOLO M.	VIA DELL'ARTIGIANO 8/F-8-G , 31050 MONASTIER di TREVISO (TV) tel: 0422 842157 - fax: 0422 708978	

DONE WITH DESIGN CAD - PROHIBITED THE CHANGES MANUAL

Rev. 01 – 17/05/2023